INDUSTRIAL VIBRATION MOTORS

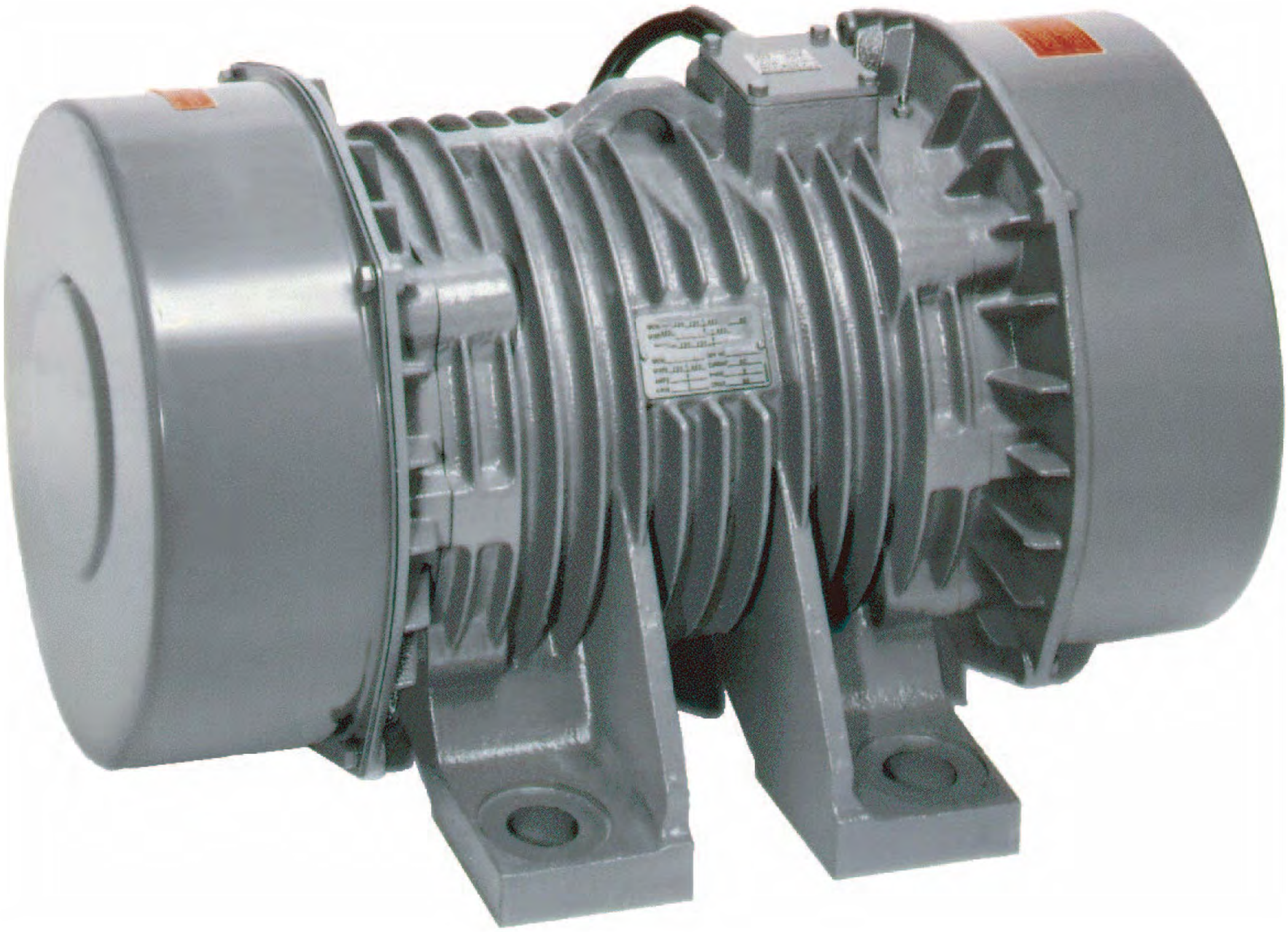

53 DIFFERENT MODELS

Frequency Ranges:
3600, 1800, 1200, & 900 RPM

Horsepower Ranges:
1/50 to 17-1/2 HP

Force Outputs from
30 Lbs. to Over 40,000 Lbs.

TINSLEY COMPANY

Need Help Fast? Ask a question or get a price quote:
www.TinsleyCompany.com
(979) 217-1480

UNPARALLELED DESIGN FEATURES

HEAVY DUTY CONSTRUCTION guarantees long life and excellent field performance. Ductile iron castings, steel end covers and high alloy fasteners are just some of the unique design features. All units can be mounted horizontally or vertically.

LONG LIFE BEARINGS insure peak, long-term performance. Our B-10 bearing life is unsurpassed in the industry. Our smaller units are furnished with ball bearings which are sealed for the life of the bearing. Larger units employ both ball and roller bearings with grease fittings.

0% TO 100% FORCE ADJUSTMENT is available on all but our smallest model. Many competitive units offer models with limited "continuous duty" force settings & continuous operation on all models at the maximum force.

THE HIGHEST FORCE TO MOTOR WEIGHT RATIO in the industry.

LOW NOISE LEVEL. All motors average 55 db(A) as measured five feet from the motor.

DUST TIGHT CONSTRUCTION AND SPLASHPROOF DESIGN make these motors suitable for dusty, dirty environments, as well as outdoors in rain or snow.

TERMINAL JUNCTION BOX AND CABLE are assembled with compression type Belleville locking washers to prevent loosening by vibrator.

Sizing Information

In order to select the correct size rotary electric vibrator for any hopper or bin application, the ratio of the weight of material in the sloped wall section of the hopper, to the force output of the vibrator, must be determined. Although each application is different, most applications should have a ratio of one pound of vibratory force for every ten pounds of material in the sloped wall section of the hopper.

When dealing with bin, hopper and chute applications, the 1800 RPM higher amplitude motors usually will provide the required force in order to activate flow of "difficult" material. The 3600 RPM motors are primarily used for materials having characteristics ranging from "free flowing" to "difficult."

The following two formulas will help you select the correct size vibrator:

1) Weight of Material in the Sloped Hopper Section = Bulk Density of Product x Volume (cu. ft.) of the hopper section.
2) To calculate the volume of a conical Hopper: 1.0472 x vertical height x [R2 + (R x r) + r2] = volume

where R is the radius of the cone at the transition point and r is the radius of the cone at the discharge.

MAT'L. WT. IN SLOPED HOPPER (lbs.)	B.E.S.T. MODEL 115 v. 1p., 60c.	B.E.S.T MODEL 230/460 v. 3p., 60c.	AVG. WALL THICKNESS
200	BES-30-2B		< 20 ga.
1,100	BES-110-2C	BE-110-2C	16-20 ga.
2,200	BES-220-2B	BE-220-2C	1/8-3/16"
4,400	BES-440-2B	BE-440-2C	3/16-1/4"
7,700	BES-770-2B	BE-770-2B	3/16-1/4"
13,200		BE-1320-2B	1/4-3/8"
22,000		BE-2200-2B	3/8-1/2"
35,200		BE-3520-2B	1/2-3/4"
50,600		BE-5060-2B	3/4-1"
66,000		BE-6600-2B	1 - 1-1/4"
88,000		BE-8800-2B	1-1/4 - 1-1/2"

Locating Vibrator Motors on Hoppers & Bins

The majority of applications require only one (1) BE motor vibrator. Figure 1 illustrates the most commonly recommended mounting for a single unit on a bin or hopper, attaching the motor 1/3 up the sloped wall section.

Applications requiring more than one vibrator generally involve larger hoppers or more difficult flowing materials. Figures 2 and 3 illustrate the mounting of 2 and 3 vibrators, respectively. More than 3 vibrators are rarely used on a particular hopper or bin.

SINGLE VIBRATOR

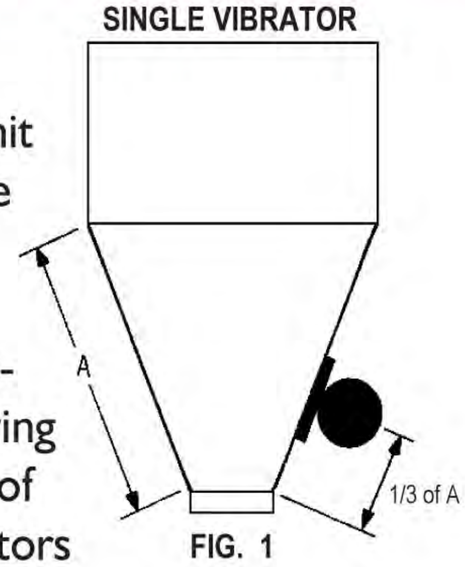

FIG. 1

TWO VIBRATORS

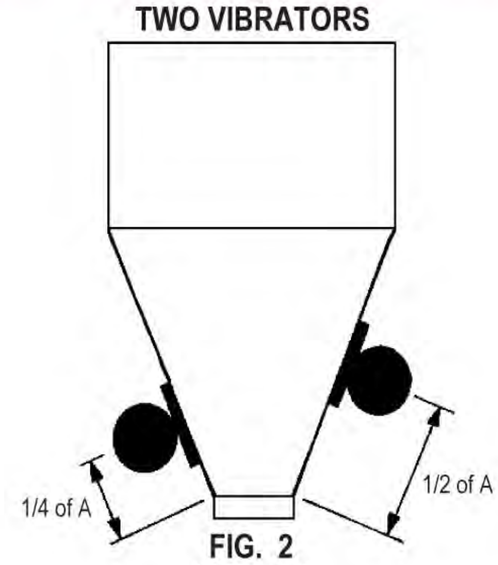

FIG. 2
(180° apart)

THREE VIBRATORS

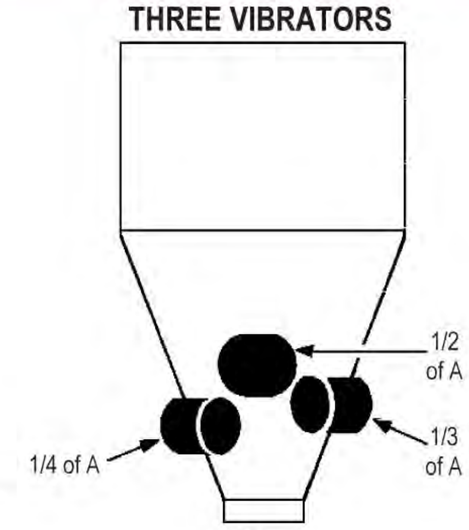

FIG. 3
(120° apart)

3600
RPM
Single Phase
115/1/60

MODEL BES-440-2B SHOWN ABOVE

Quick Facts

- **Operates Off Standard 115/1/60 Power**
- **Continuous Duty Rated**
- **Totally Enclosed, Dust Tight Housing**
- **Capacitor Starter Supplied with Each Unit**
- **Quiet Operating, Less Than 60 dba**
- **0-100% Force Adjustment**

A capacitor starter is supplied with each 115 volt/1p./60c. unit.

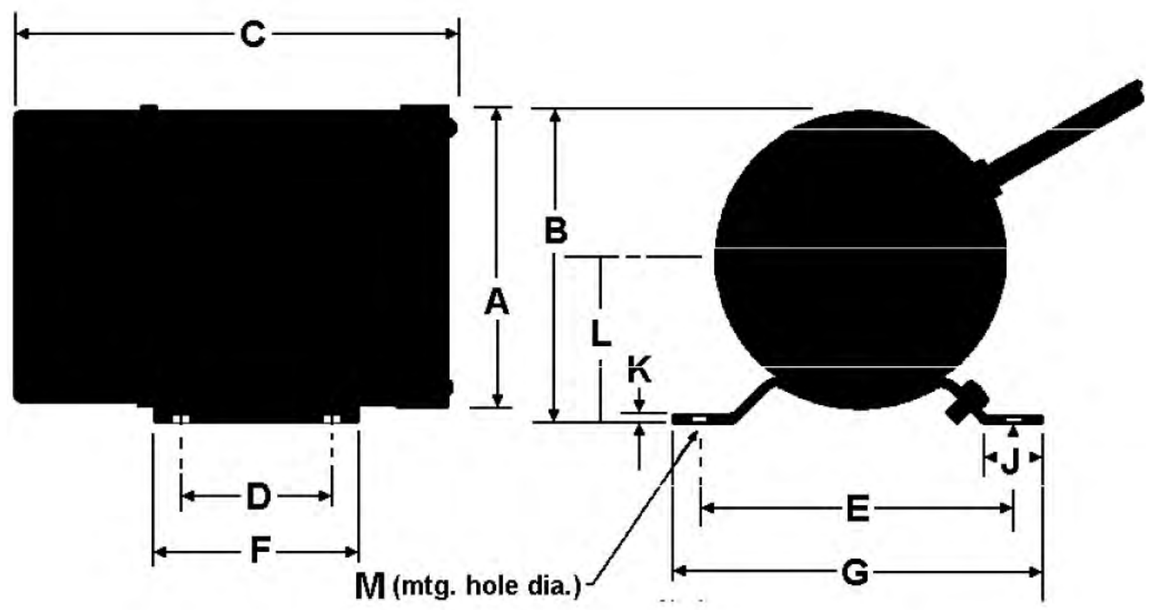

Drawing A

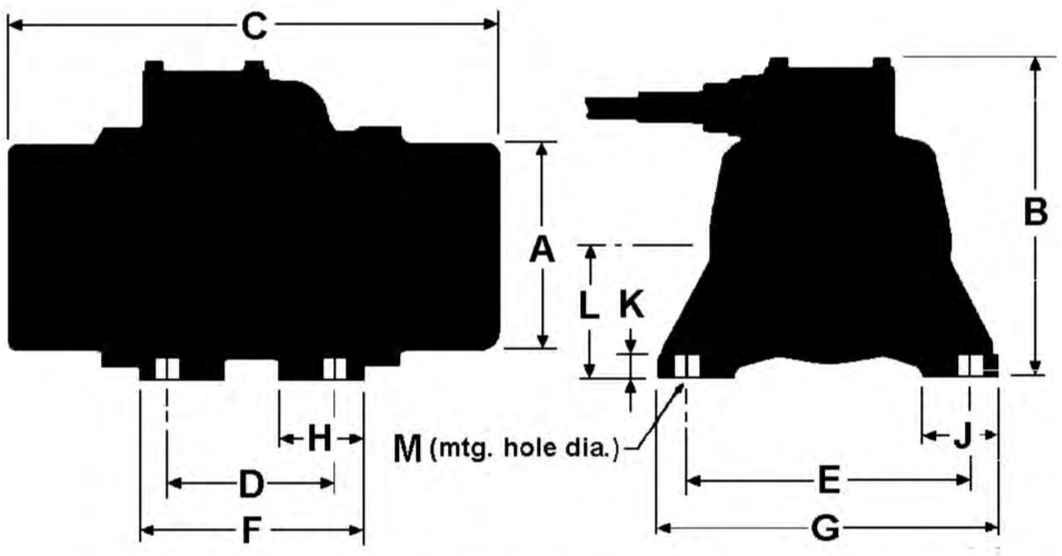

Drawing B

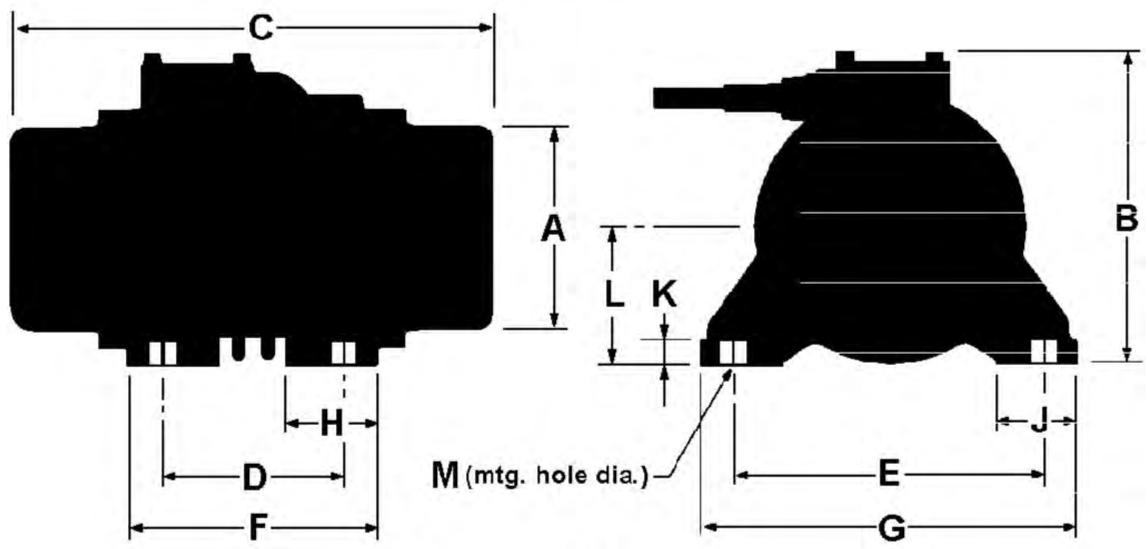

Drawing C

MODEL	H.P.	MAX FORCE (lbs)	DRWG. REF.	DIMENSIONS (inches)												FULL LOAD AMPS AT 115v.	WT. (lbs.)	UN-BALANCE (inch-lbs)
				A	B	C	D	E	F	G	H	J	K	L	M			
BES-30-2B	1/50	30	A	3-11/32	3-7/16	5-5/16	1-47/64	3-35/64	2-3/8	4-7/32	----	23/32	3/32	1-25/32	11/32	0.39	6	0.100
BES-110-2C	1/25	110	B	4-19/64	6-5/8	8	1-9/16	4-11/16	2-3/4	5-21/32	----	1-9/32	29/64	2-29/64	7/16	0.53	14	0.318
BES-220-2B	1/12	220	B	4-5/32	6-5/16	8-15/32	3-5/32	5-1/8	4-11/32	6-5/16	1-19/32	1-15/32	13/32	2-5/8	15/32	1.2	22	0.636
BES-440-2B	1/6	440	B	4-11/32	6-29/32	9-15/32	3-35/64	5-29/32	4-23/32	7-3/32	1-25/32	1-19/32	15/32	2-13/16	9/16	1.9	30	1.27
BES-770-2B	1/3	770	C	4-15/16	7-11/16	11-13/16	4-21/64	7-31/64	5-29/32	9-1/16	2-3/16	2-31/32	19/32	3-5/16	23/32	2.9	45	2.22

- Models BES-110 through BES-770 are factory preset at 100% of maximum force. They are totally adjustable by a simple setting change on the eccentric weights. Force output for the BES-30 is not adjustable.
- Capacitor and overload protection for the BES-110 through BES-770 are provided in a NEMA 12 enclosure, supplied with each unit. Model BES-30 has the capacitor built into the motor itself.

3600
RPM
2-Pole, 230/460 Volt
3-Phase, 60 Cycle

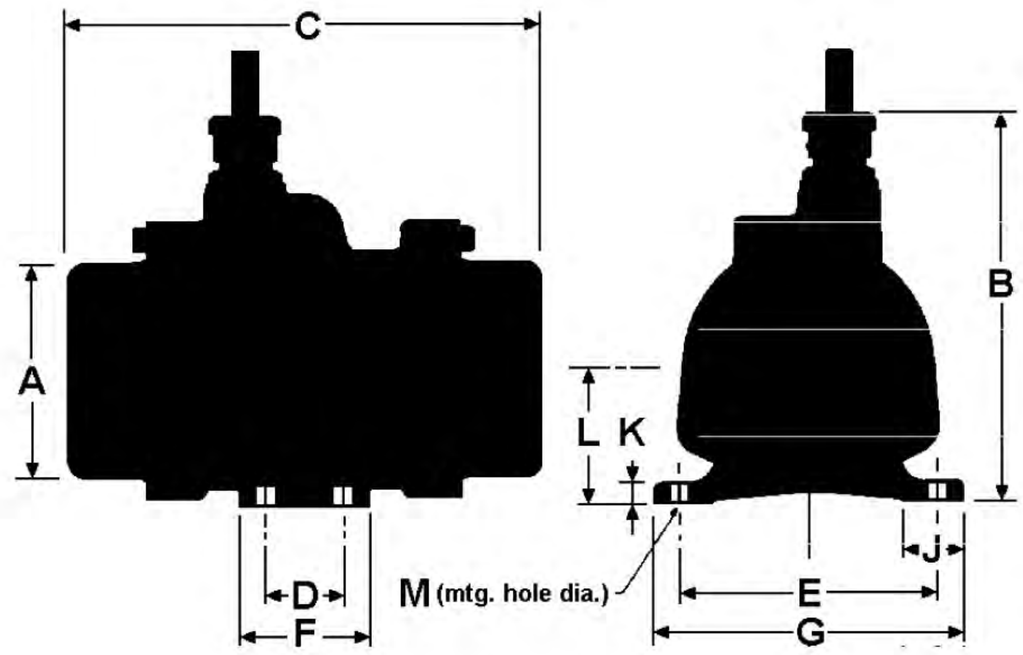

Drawing A

Quick Facts

- **Dust Tight Design**
- **Ideal for Bins, Hoppers and Chutes**
- **High Force to Motor Weight Ratio**
- **Heavy Duty Design for Mounting in any Position**
- **Ideal for Concrete and Refractory Applications**

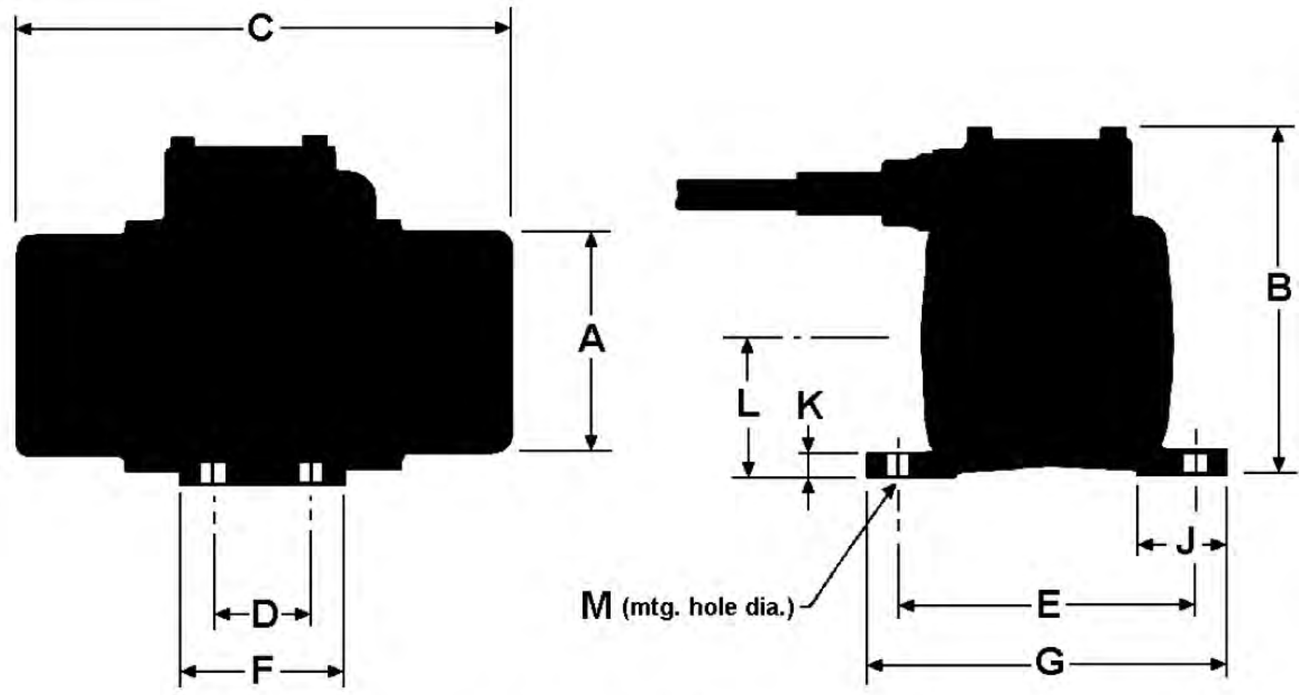

Drawing B

MODEL BE-770-2B SHOWN ABOVE

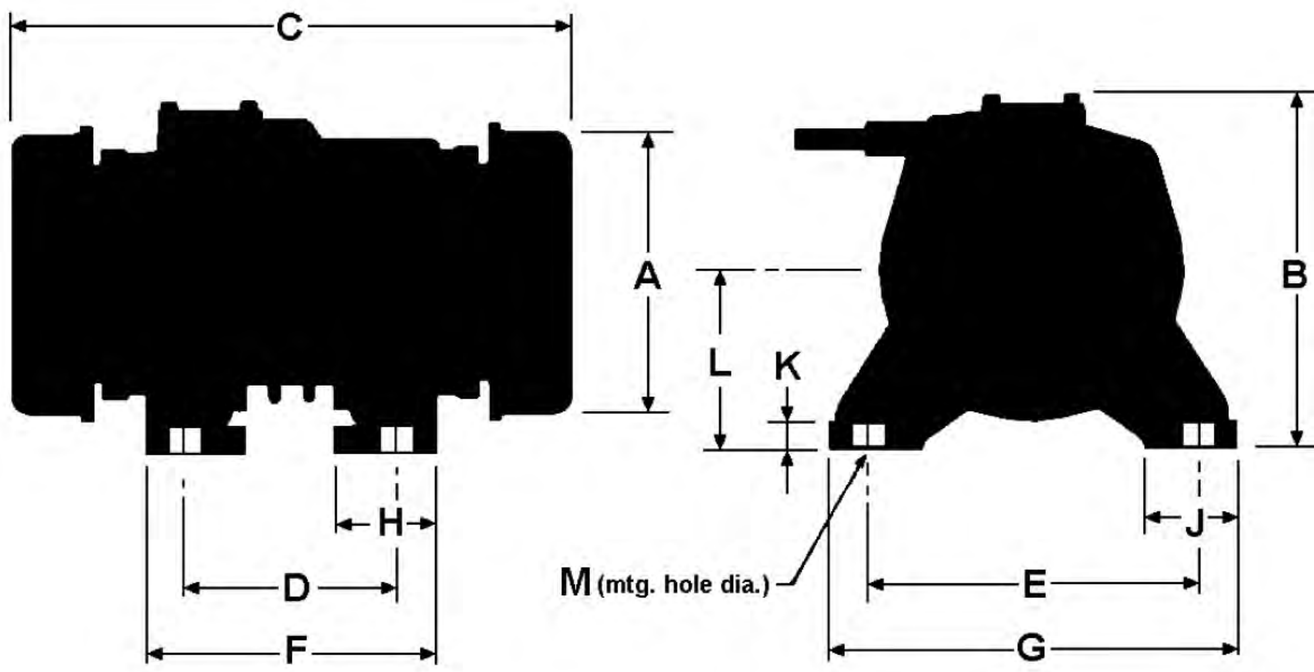

Drawing C

MODEL	H.P.	MAX FORCE (lbs)+	DRWG. REF.	DIMENSIONS (inches)												FULL LOAD AMPS AT		WT. (lbs.)	UN-BALANCE (inch-lbs)
				A	B	C	D	E	F	G	H	J	K	L	M	230v.	460v.		
BE-110-2C*	1/20	110	A	4-19/64	5-55/64	8	1-9/16	4-11/16	2-3/4	5-21/32	----	1-9/32	29/64	2-29/64	7/16	0.33	0.15	10	0.32
BE-220-2C	1/10	220	B	4-19/64	5-55/64	8	1-9/16	4-11/16	2-3/4	5-21/32	----	1-9/32	29/64	2-29/64	7/16	0.41	0.25	15	0.64
BE-440-2C	1/5	440	C	4-19/64	5-55/64	9	1-9/16	4-11/16	2-3/4	5-21/32	1-9/32	1-15/32	25/64	2-29/64	7/16	0.62	0.35	20	1.27
BE-770-2B	1/3	770	C	4-11/32	6-29/32	10-7/16	3-35/64	5-29/32	4-23/32	7-3/32	1-25/32	1-19/32	15/32	2-15/16	9/16	1.1	0.6	35	2.22
BE-1320-2B	1/2	1,320	C	4-15/16	7-11/16	11-13/16	4-21/64	7-31/64	5-29/32	9-1/16	2-3/16	1-31/32	19/32	3-5/16	23/32	1.6	0.9	55	3.82
BE-2200-2B	1	2,200	C	6-11/16	8-9/32	13-25/32	4-23/32	8-21/32	6-11/16	10-5/8	2-9/16	1-3/8	23/32	3-5/8	13/16	2.7	1.4	78	6.36
BE-3520-2B	1-1/2	3,520	C	6-11/16	10-1/4	16-17/32	5-33/64	9-29/64	7-7/8	11-13/16	2-31/32	2-3/4	13/16	5-1/16	1-1/32	4.0	2.0	110	10.20
BE-5060-2B	2-1/4	5,060	C	7-1/2	11-1/32	17-23/32	5-29/32	10-15/64	8-9/32	12-19/32	3-5/32	2-3/4	13/16	5-19/32	1-1/32	5.6	2.9	140	14.60
BE-6600-2B	3	6,600	C	8-7/8	12-19/32	19-11/16	6-11/16	12-13/64	9-7/16	14-31/32	3-3/4	3-11/32	1-1/8	6-7/32	1-5/16	7.0	3.6	210	19.10
BE-8800-2B	4	8,800	C	8-7/8	14-19/32	22-1/16	8-21/32	13-25/32	11-13/16	16-15/16	----	3-15/16	1-5/16	7-9/32	1-17/32	9.8	4.9	290	25.40

- 3600 RPM motors are dual voltage, either 230 volt or 460 volt 3-phase. Specify voltage when ordering. 575 volt available on special order.
- All 3600 RPM motors are rated for continuous duty at the maximum force setting.
- 50 cycle motors are available for all 3600 RPM motors. Consult factory for pricing and availability.

\+ Factory preset at 100% of maximum force. All units are totally adjustable by a simple setting change on the eccentric weights.

* Available in 460 volt only.

1800
RPM
4-Pole, 230/460 Volt
3-Phase, 60 Cycle

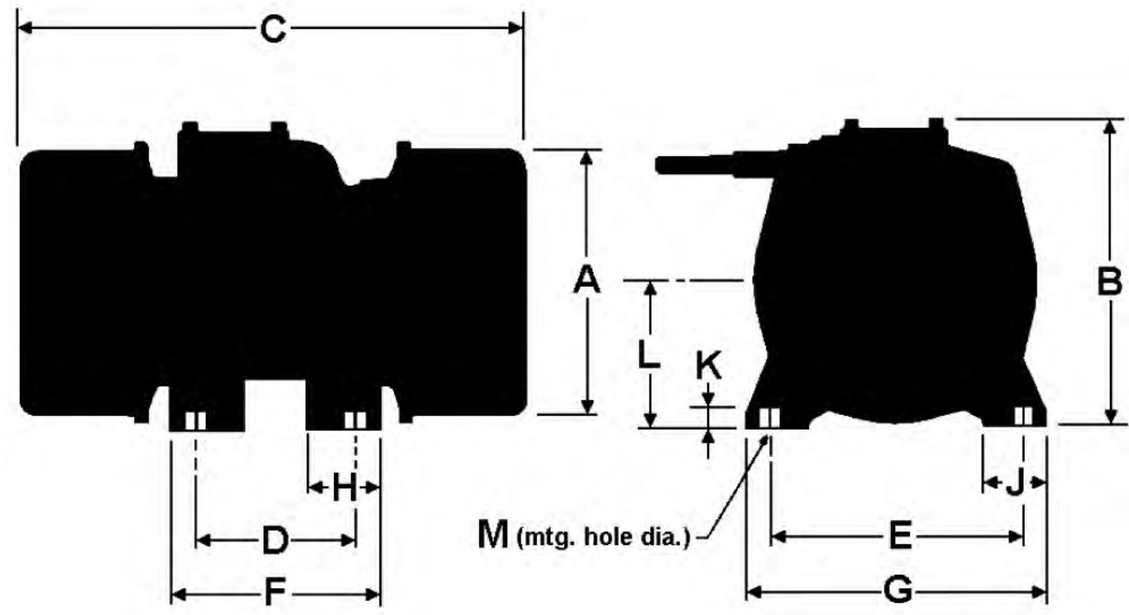

Drawing A

Quick Facts

- **For Bins and Hoppers Requiring Greater Amplitude**
- **For Vibrating Tables, Feeders and Screeners**
- **Continuous Duty Rated at Maximum Force**
- **1/10 HP to 10 HP Size Range**

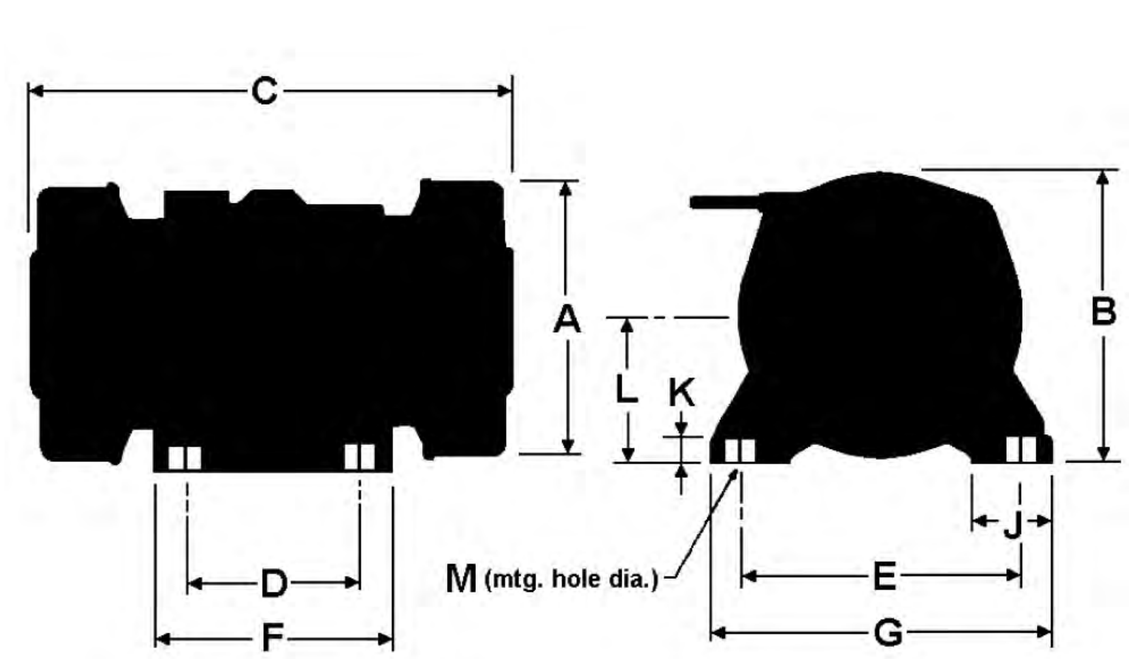

Drawing B

MODEL BE-1980-4B SHOWN ABOVE

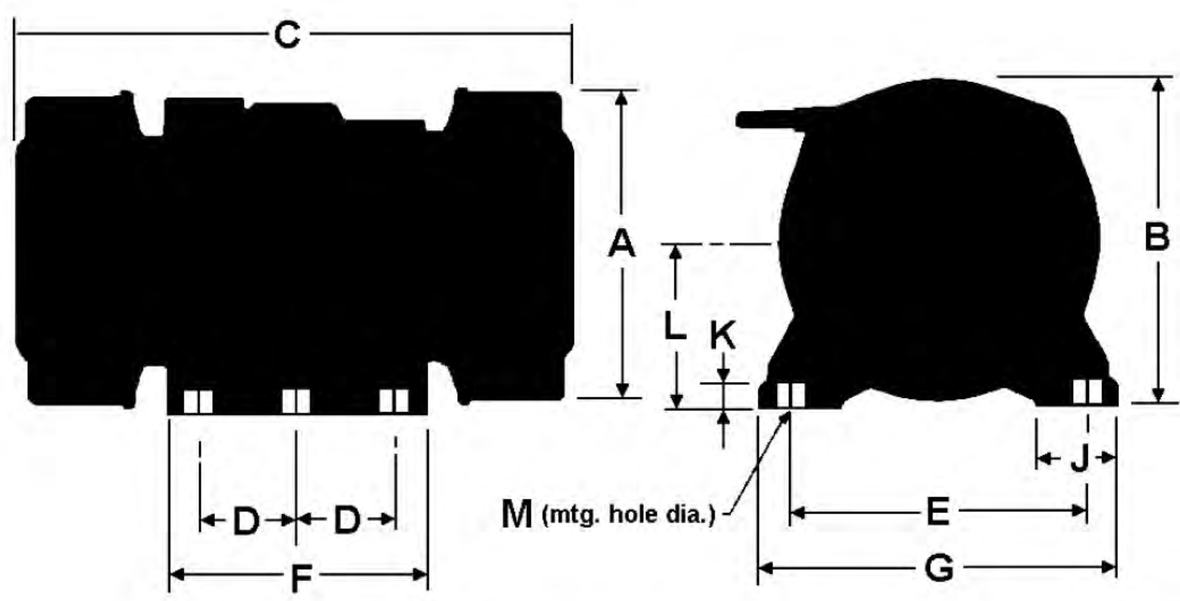

Drawing C

MODEL	H.P.	MAX FORCE (lbs)+	DRWG. REF.	DIMENSIONS (inches)												FULL LOAD AMPS AT		WT. (lbs.)	UN-BALANCE (inch-lbs)
				A	B	C	D	E	F	G	H	J	K	L	M	230v.	460v.		
BE-330-4B	1/10	330	A	4-19/64	5-55/64	10	1-9/16	4-11/16	2-3/4	5-21/32	1-9/32	1-3/16	25/64	2-29/64	7/16	0.50	0.33	25	3.82
BE-660-4B	1/6	660	A	6-1/8	7-3/32	10-5/8	3-5/32	5-29/32	4-11/32	7-3/32	1-19/32	1-3/8	13/32	3-5/16	15/32	0.80	0.52	35	7.63
BE-1320-4B	1/3	1,320	A	6-11/16	7-11/16	12-19/32	3-15/16	6-19/64	5-1/8	7-1/2	1-25/32	1-19/32	15/32	3-5/8	9/16	1.2	0.70	50	15.3
BE-1980-4B	1/2	1,980	A	7-1/2	8-9/32	13-3/8	4-21/64	7-3/32	5-29/32	8-21/32	2-3/16	1-31/32	19/32	4-1/32	23/32	1.7	0.99	70	22.9
BE-2640-4B	4/5	2,640	A	8-7/8	9-15/32	14-3/16	5-33/64	8-21/32	7-1/2	10-5/8	2-9/16	2-3/8	23/32	4-23/32	13/16	2.5	1.4	95	30.5
BE-3740-4B	1-1/10	3,740	A	9-21/32	10-1/4	16-17/32	5-33/64	9-29/64	7-7/8	11-13/16	2-31/32	2-3/4	13/16	5-1/8	1-1/32	3.0	1.6	125	43.2
BE-5280-4B	1-1/2	5,280	A	10-7/16	11-1/32	18-29/32	5-29/32	10-15/64	8-9/32	12-19/32	3-5/32	2-3/4	13/16	5-19/32	1-1/32	3.8	2.0	165	61.0
BE-7480-4B	2	7,480	A	11-5/8	12-19/32	20-7/8	6-11/16	12-13/64	9-15/32	14-31/32	3-3/4	3-11/32	1-1/8	6-7/32	1-5/16	5.0	2.6	245	86.5
BE-11440-4B	3	11,440	B	13-19/32	14-3/8	23-7/32	8-21/32	13-25/32	11-13/16	16-15/16	----	3-15/16	1-5/16	7-9/32	1-17/32	7.7	4.0	375	132
BE-16500-4B	5	16,500	C	15-9/16	16-11/32	24-13/16	4-59/64	14-31/32	13-1/32	18-1/8	----	4-5/32	1-5/16	8-9/32	1-17/32	12.3	6.2	495	191
BE-18480-4B	7-1/2	18,480	C	15-9/16	16-11/32	26-3/8	4-59/64	14-31/32	13-1/32	18-1/8	----	4-5/32	1-5/16	8-9/32	1-17/32	18.2	9.4	565	214
BE-24200-4B	10	24,200	C	18-5/16	18-23/32	28-3/4	5-33/64	17-21/64	14-9/16	20-7/8	----	4-15/16	1-1/2	9-15/32	1-25/32	25	13	805	280

- 1800 RPM motors are dual voltage, either 230 volt or 460 volt 3-phase. Specify voltage when ordering. 575 volt available on special order.
- All 1800 RPM motors are rated for continuous duty at the maximum force setting.
- 50 cycle motors are available for all 1800 RPM motors. Consult factory for pricing and availability.

\+ Factory preset at 100% of maximum force. All units are totally adjustable by a simple setting change on the eccentric weights.

1200
RPM
6-Pole, 230/460 Volt
3-Phase, 60 Cycle

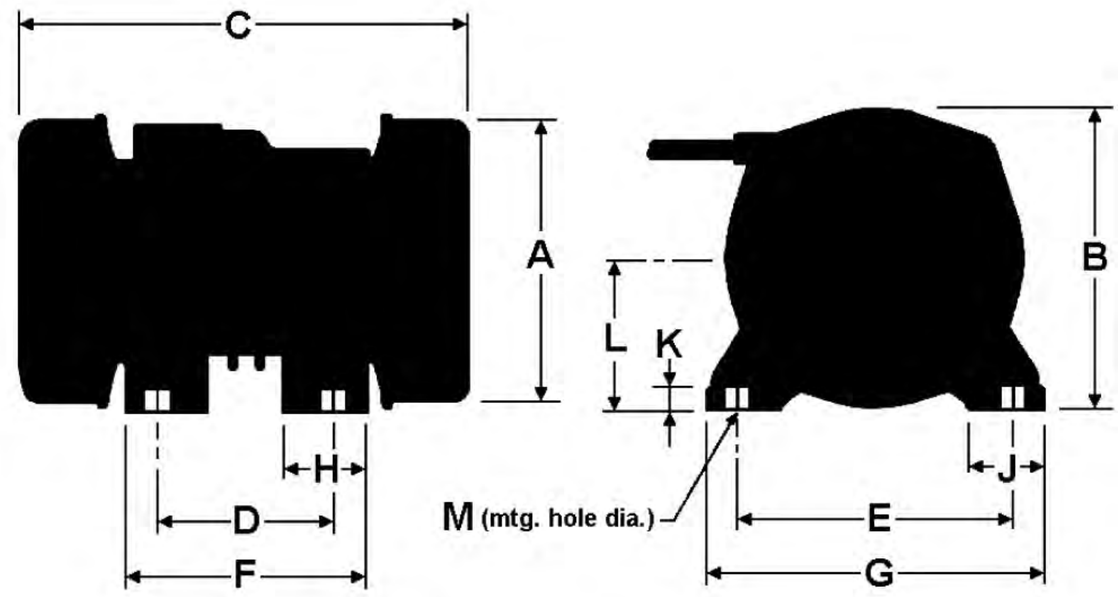

Drawing A

Quick Facts

- **For Large Feeders, Tables and Screeners**
- **High Amplitude, Low Frequency Design**
- **1/4 HP to 17-1/2 HP Size Range**
- **0-100% Force Adjustment**
- **Continuous Duty Rated at Maximum Force**

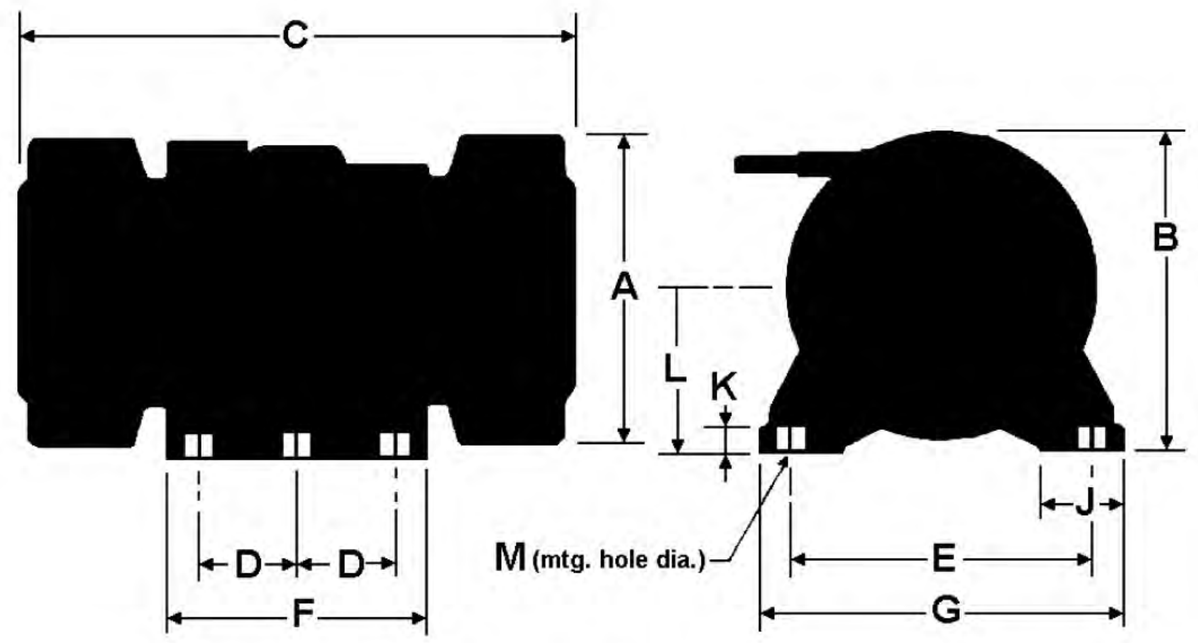

Drawing B

MODEL BE-3960-6B SHOWN ABOVE

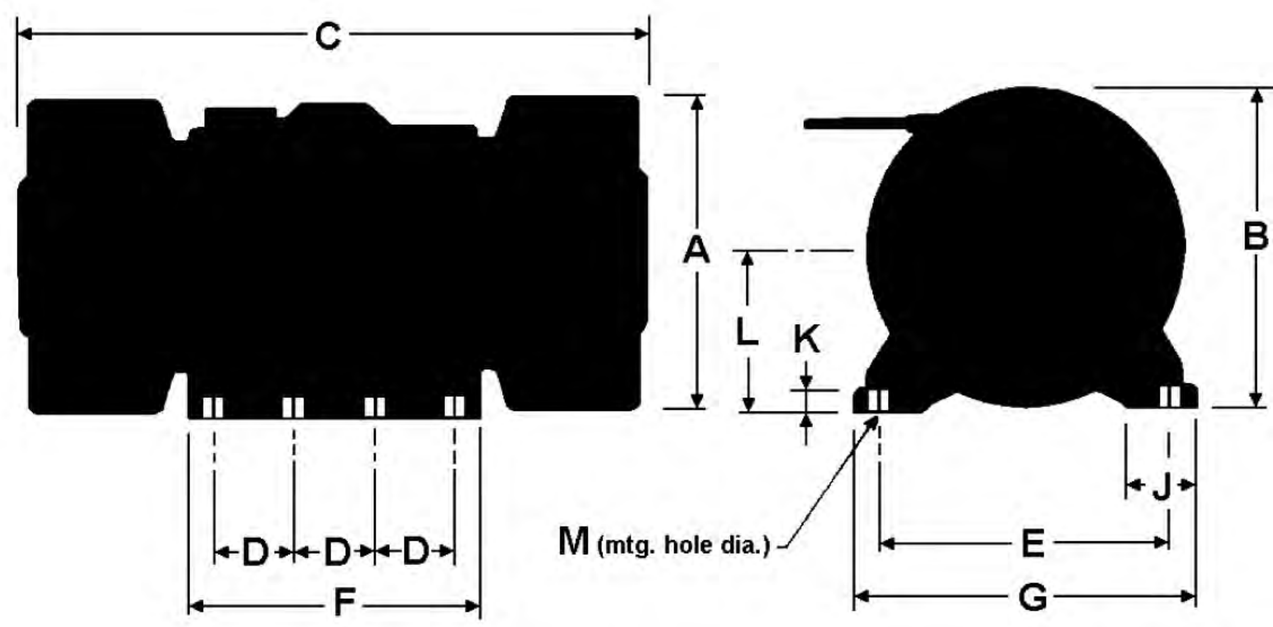

Drawing C

MODEL	H.P.	MAX FORCE (lbs)+	DRWG. REF.	DIMENSIONS (inches)												FULL LOAD AMPS AT		WT. (lbs.)	UN-BALANCE (inch-lbs)
				A	B	C	D	E	F	G	H	J	K	L	M	230v.	460v.		
BE-660-6B	1/4	660	A	6-11/16	7-11/16	11-7/16	3-15/16	6-19/64	5-1/8	7-1/2	1-25/32	1-19/32	15/32	3-5/8	9/16	1.1	0.65	49	17.2
BE-1100-6B	1/2	1,100	A	7-1/2	8-9/32	13	4-21/64	7-3/32	5-29/32	8-21/32	2-3/16	1-31/32	19/32	4-1/32	23/32	1.9	1.3	71	28.6
BE-1980-6B	4/5	1,980	A	8-7/8	9-15/32	14-9/16	5-33/64	8-21/32	7-1/2	10-5/8	2-9/16	2-3/8	23/32	4-23/32	13/16	2.7	1.6	104	51.5
BE-2860-6B	1-1/10	2,860	A	9-21/32	10-1/4	15-3/8	5-33/64	9-29/64	7-7/8	11-13/16	2-31/32	2-3/4	13/16	5-1/8	1-1/32	3.7	2.1	139	74.4
BE-3960-6B	1-1/2	3,960	A	10-7/16	11-1/32	17-23/32	5-29/32	10-15/64	8-9/32	12-19/32	3-5/32	2-3/4	13/16	5-19/32	1-1/32	4.8	2.7	185	103
BE-5280-6B	2	5,280	A	11-5/8	12-19/32	19-11/16	6-11/16	12-13/64	9-15/32	14-31/32	3-3/4	3-11/32	1-1/8	6-7/32	1-5/16	6.1	3.3	265	137
BE-7480-6B	3	7,480	A	13-19/32	14-3/8	22-7/16	8-21/32	13-25/32	11-13/16	16-15/16	----	3-15/16	1-5/16	7-9/32	1-17/32	7.9	4.2	364	195
BE-9900-6B	4	9,900	A	13-19/32	14-3/8	24-13/16	8-21/32	13-25/32	11-13/16	16-15/16	----	3-15/16	1-5/16	7-9/32	1-17/32	10.8	5.7	448	258
BE-13200-6B	5-1/3	13,200	B	15-9/16	16-11/32	24-13/16	4-59/64	14-31/32	13	18-1/8	----	4-5/32	1-5/16	8-9/32	1-17/32	13.4	7.4	567	343
BE-17600-6B	7-1/2	17,600	B	15-9/16	16-11/32	28-47/64	4-59/64	14-31/32	13	18-1/8	----	4-5/32	1-5/16	8-9/32	1-17/32	18.5	10	662	458
BE-24200-6B	10	24,200	B	18-5/16	18-23/32	29-15/16	5-33/64	17-21/64	14-9/16	20-7/8	----	4-15/16	1-1/2	9-15/32	1-25/32	27	15	924	630
BE-30800-6B	12	30,800	C	20-9/32	20-11/16	34-21/32	5-33/64	18-29/32	20-3/32	22-7/16	----	4-15/16	1-1/2	10-7/16	1-25/32	31	17	1268	801
BE-36300-6B	15	36,300	C	20-9/32	20-11/16	36-39/64	5-33/64	18-29/32	20-3/32	22-7/16	----	4-15/16	1-1/2	10-7/16	1-25/32	37	20	1389	944
BE-40700-6B	17-1/2	40,700	C	22-1/16	22-7/16	36-7/32	5-33/64	20-15/32	20-3/32	24-1/32	----	4-15/16	1-1/2	11-7/16	1-25/32	44	22	1599	1059

- 1200 RPM motors are dual voltage, either 230 volt or 460 volt 3-phase. Specify voltage when ordering. 575 volt available on special order.
- All 1200 RPM motors are rated for continuous duty at the maximum force setting.
- 50 cycle motors are available for all 1200 RPM motors. Consult factory for pricing and availability.

+ Factory preset at 100% of maximum force. All units are totally adjustable by a simple setting change on the eccentric weights.

900
RPM
8-Pole, 230/460 Volt
3-Phase, 60 Cycle

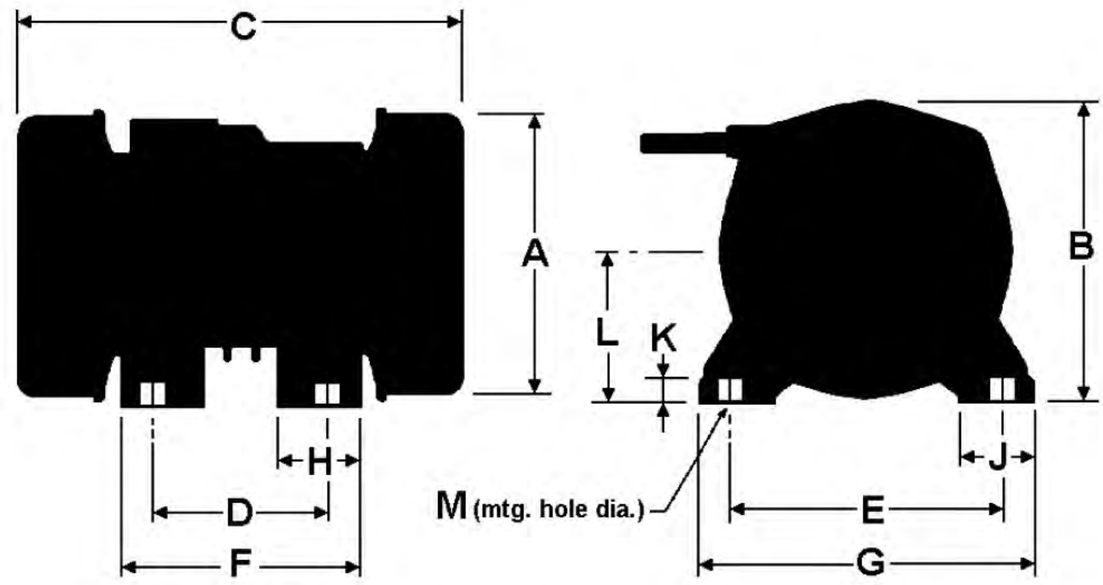

Drawing A

Quick Facts

- **Ideal Shakeout Vibrator for Foundries**
- **High Capacity Feeder Drive**
- **Suitable Drive for Large Screeners**
- **Replace Old Belt Driven Type Shaker Drives**
- **Quiet Operating, Dust Tight, Continuous Duty Rated**

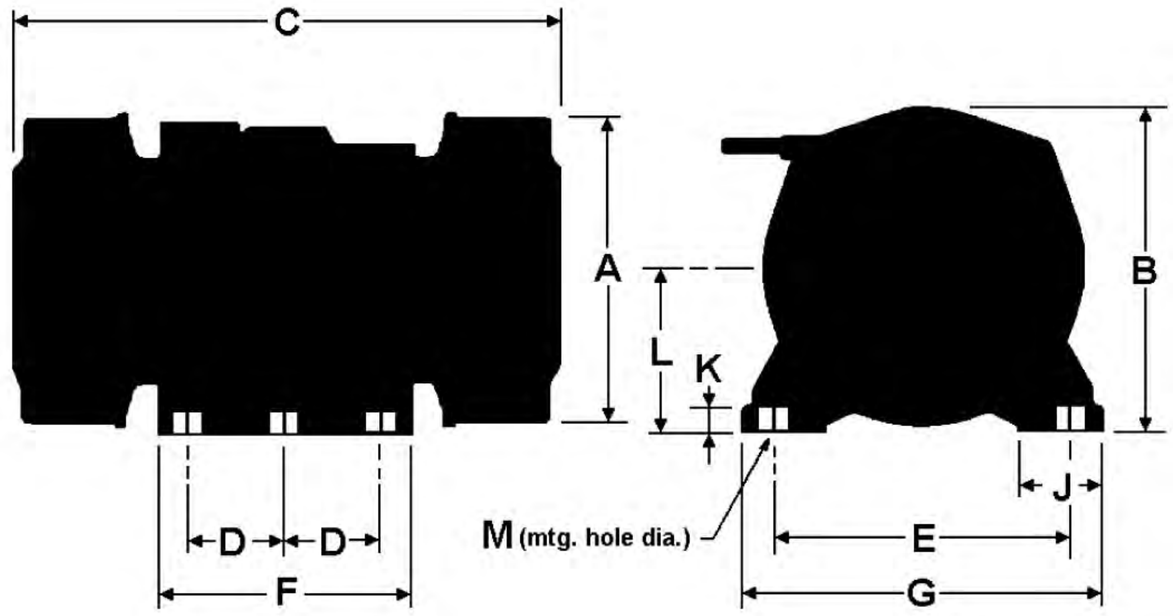

Drawing B

MODEL BE-7700-8B SHOWN ABOVE

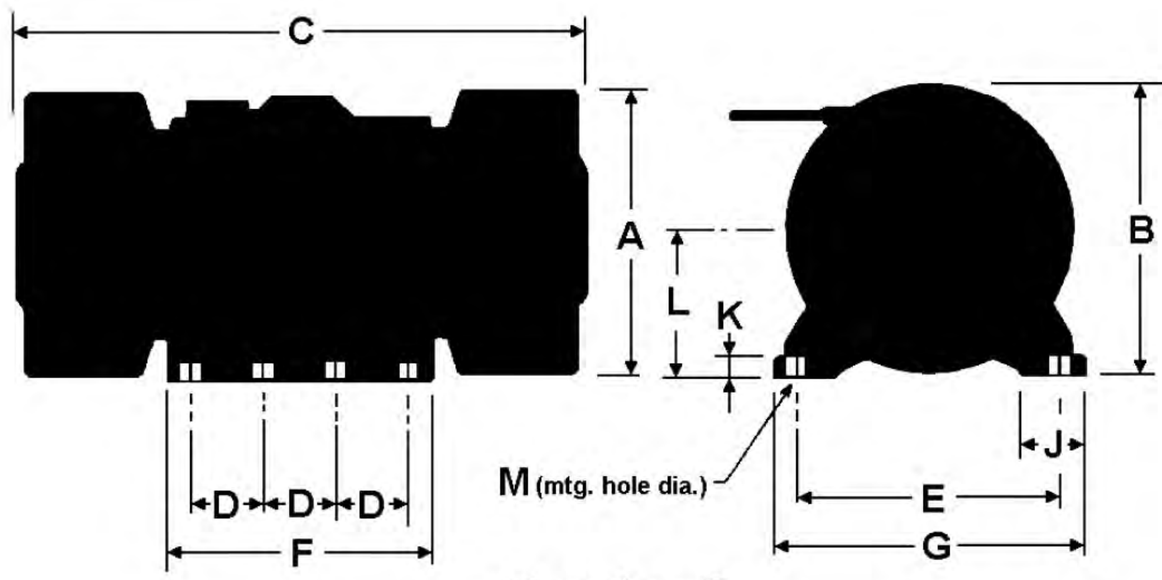

Drawing C

MODEL	H.P.	MAX FORCE (lbs)+	DRWG. REF.	DIMENSIONS (inches)												FULL LOAD AMPS AT		WT. (lbs.)	UN-BALANCE (inch-lbs)
				A	B	C	D	E	F	G	H	J	K	L	M	230v.	460v.		
BE-1100-8B	1/2	1,100	A	8-7/8	9-15/32	14-9/16	5-33/64	8-21/32	7-1/2	10-5/8	2-9/16	2-3/8	23/32	4-23/32	13/16	2.4	1.5	100	50.9
BE-1606-8B	4/5	1,606	A	9-21/32	10-1/4	15-3/8	5-33/64	9-29/64	7-7/8	11-13/16	2-31/32	2-3/4	13/16	5-1/8	1-1/32	3.3	2.0	130	74.3
BE-2200-8B	1	2,200	A	10-7/16	11-1/32	17-23/32	5-29/32	10-15/64	8-9/32	12-19/32	3-5/32	2-3/4	13/16	5-19/32	1-1/32	4.9	3.3	175	102.0
BE-4400-8B	2	4,400	A	11-5/8	12-19/32	21-21/32	6-11/16	12-13/64	9-15/32	14-31/32	3-3/4	3-11/32	1-1/8	6-7/32	1-5/16	7.5	4.4	300	203.0
BE-7700-8B	3	7,700	A	13-19/32	14-3/8	26-3/8	8-21/32	13-25/32	11-13/16	16-15/16	----	3-15/16	1-5/16	7-9/32	1-17/32	9.5	5.5	465	356.0
BE-9240-8B	4	9,240	A	13-19/32	14-3/8	28-3/4	8-21/32	13-25/32	11-13/16	16-15/16	----	3-15/16	1-5/16	7-9/32	1-17/32	9.5	5.5	486	403.0
BE-13200-8B	5	13,200	B	15-9/16	16-11/32	28-3/4	4-59/64	14-31/32	13-7/8	18-1/8	----	4-5/32	1-5/16	8-9/32	1-17/32	14.6	8.6	660	610.0
BE-16940-8B	6	16,940	B	15-9/16	16-11/32	32-3/4	4-59/64	14-31/32	13-7/8	18-1/8	----	4-5/32	1-5/16	8-9/32	1-17/32	15	7.5	803	783.0
BE-22000-8B	8	22,000	B	18-5/16	18-23/32	33-7/8	5-33/64	17-21/64	14-9/16	20-7/8	----	4-15/16	1-1/2	9-15/32	1-25/32	25	15	1070	1017.0
BE-27500-8B	10	27,500	C	20-9/32	20-11/16	39-3/8	5-33/64	18-29/32	20-3/32	22-7/16	----	4-15/16	1-1/2	10-7/16	1-25/32	31	18	1420	1272.0
BE-33000-8B	12	33,000	C	20-9/32	20-11/16	40-15/16	5-33/64	18-29/32	20-3/32	22-7/16	----	4-15/16	1-1/2	10-7/16	1-25/32	37	22	1560	1526.0
BE-40700-8B	15	40,700	C	22-1/16	22-7/16	39-3/4	5-33/64	20-15/32	20-3/32	24-1/32	----	4-15/16	1-1/2	11-7/16	1-25/32	43	26	1800	1882.0

- 900 RPM motors are dual voltage, either 230 volt or 460 volt 3-phase. Specify voltage when ordering. 575 available on special order.
- All 900 RPM motors are rated for continuous duty at the maximum force setting.
- 50 cycle motors are available for all 900 RPM motors. Consult factory for pricing and availability.

+ Factory preset at 100% of maximum force. All units are totally adjustable by a simple setting change on the eccentric weights.

AMPLITUDE & FORCE REQUIREMENTS

For applications involving vibratory equipment such as feeders, conveyors and tables, the following formulas should be used in calculating amplitude and force requirements.

Amplitude (inches)

Force (pounds)

Frequency (RPM/motor)

Load (pounds)
Equal to structure weight, plus motor weight, plus material or product weight.

$$\textbf{AMPLITUDE} = 70{,}500 \times \frac{\text{FORCE}}{\text{LOAD} \times (\text{FREQUENCY})^2}$$

$$\textbf{FORCE REQUIRED} = \frac{\text{AMPLITUDE} \times \text{LOAD} \times (\text{FREQUENCY})^2}{70{,}500}$$

NOTE: The actual frequencies, vibrator weights, and force figures needed for the above calculations, can be obtained from data charts on this brochure.

Adjustment of Force Output

Industrial vibration motors are easily adjusted by setting the dot on the eccentric weight to the proper (% of maximum force) output. The photo at right shows the operator setting the weights at just under 90% of maximum force.

IMPORTANT: Both ends of the motor must be adjusted to the same setting.

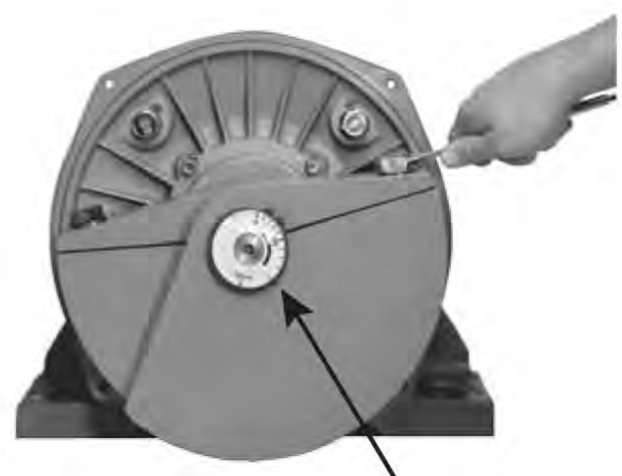

ENLARGED VIEW OF % FORCE DECAL

SETTING DOT